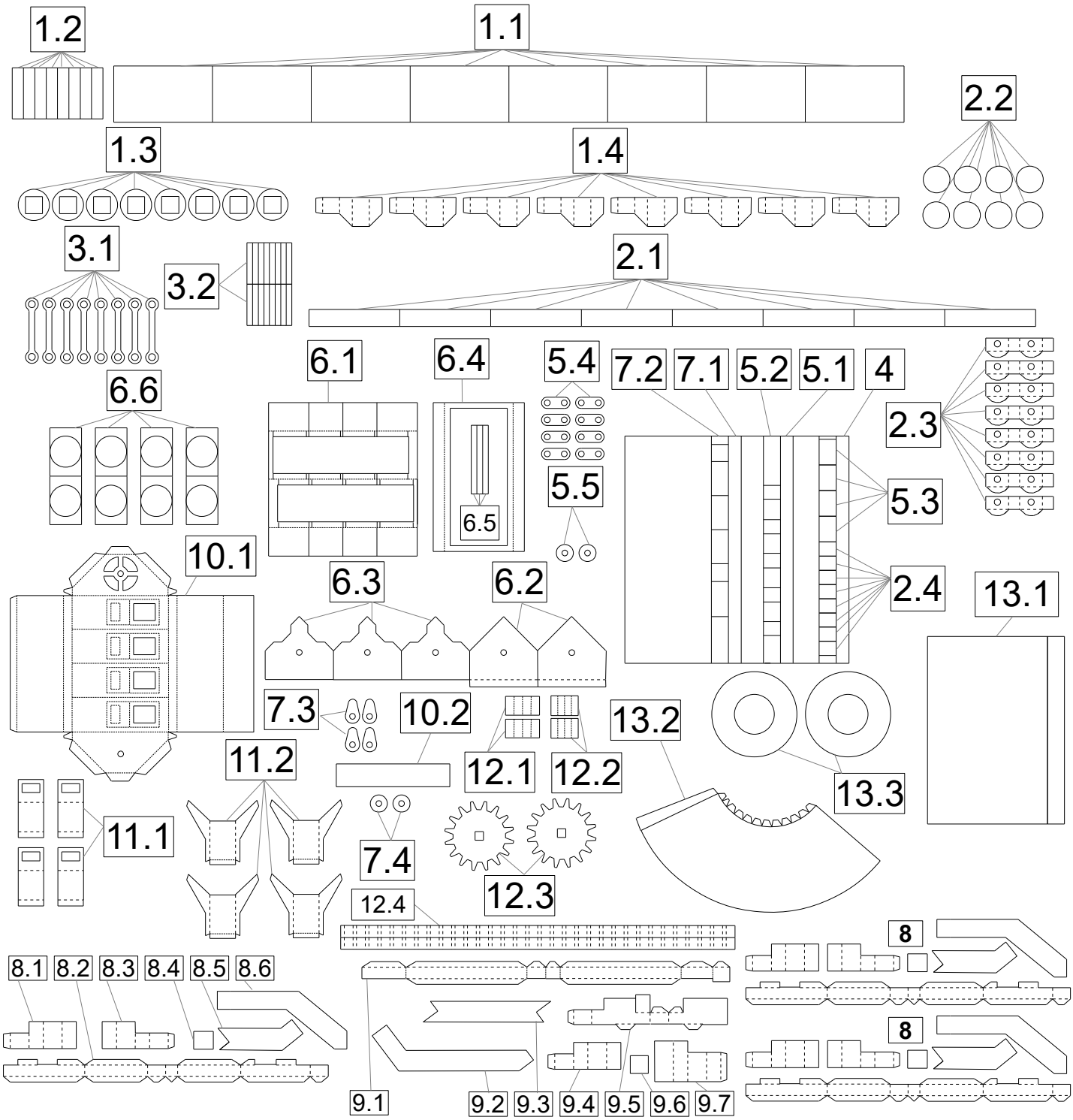
1.2
1.1
2.2
1.3
1.4
3.1
3.2
2.1
6.1
6.4
5.4
7.2
7.1
5.2
5.1
4
2.3
6.6
5.5
5.3
6.5
10.1
6.3
6.2
2.4
13.1
7.3
10.2
13.2
11.2
12.1
12.2
13.3
11.1
7.4
12.3
12.4
8
8.1
8.2
8.3
8.4
8.5
8.6
8
9.1
9.2
9.3
9.4
9.5
9.6
9.7

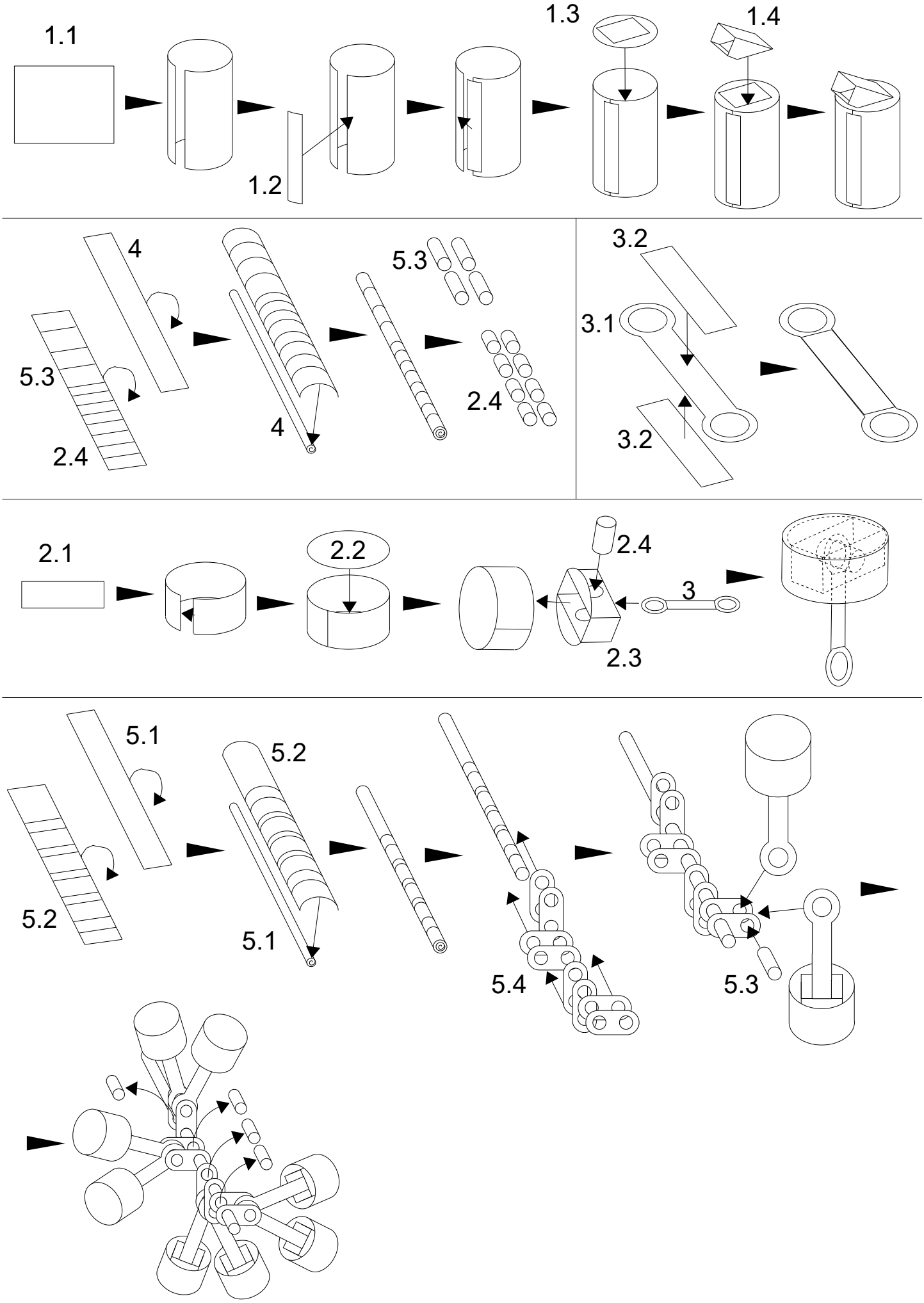
1.1
1.2
1.3
1.4
4
5.3
2.4
4
5.3
2.4
3.2
3.1
3.2
2.1
2.2
2.4
3
2.3
5.1
5.2
5.2
5.1
5.4
5.3

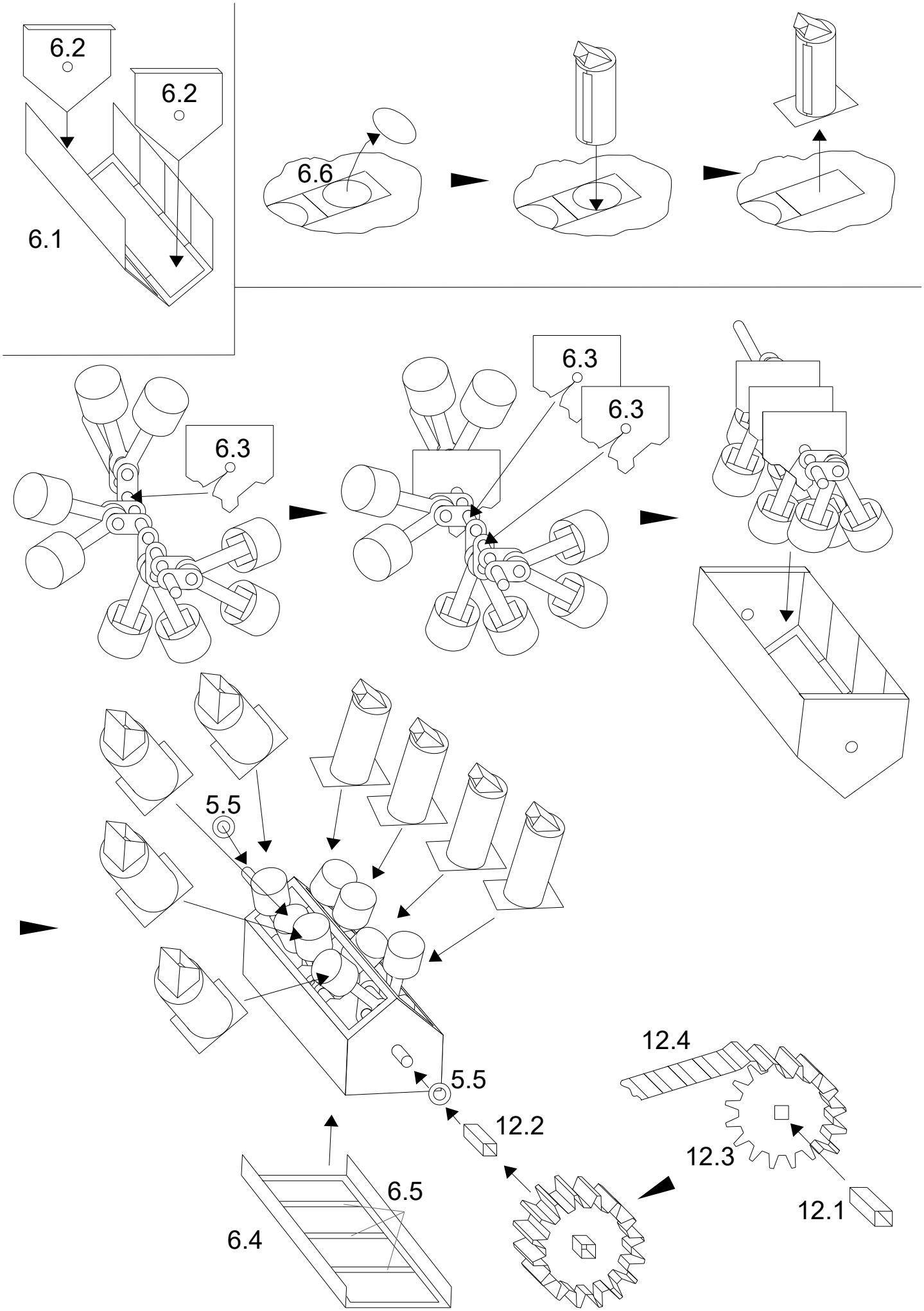
6.2
6.2
6.1
6.6
6.3
6.3
6.3
5.5
5.5
12.2
12.4
12.3
12.1
6.5
6.4

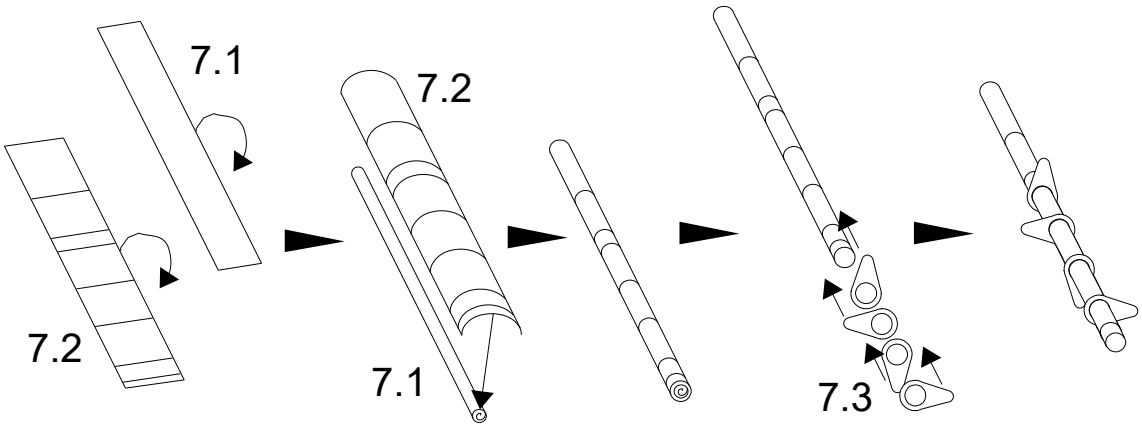
7.1
7.2
7.2
7.1
7.3

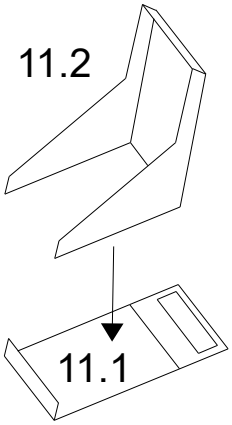
11.2
11.1

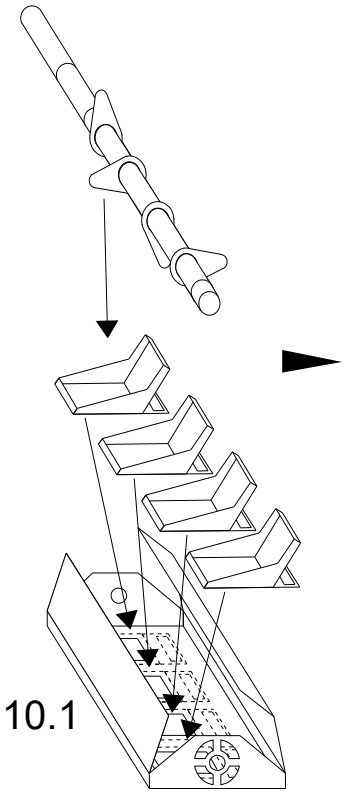
10.1

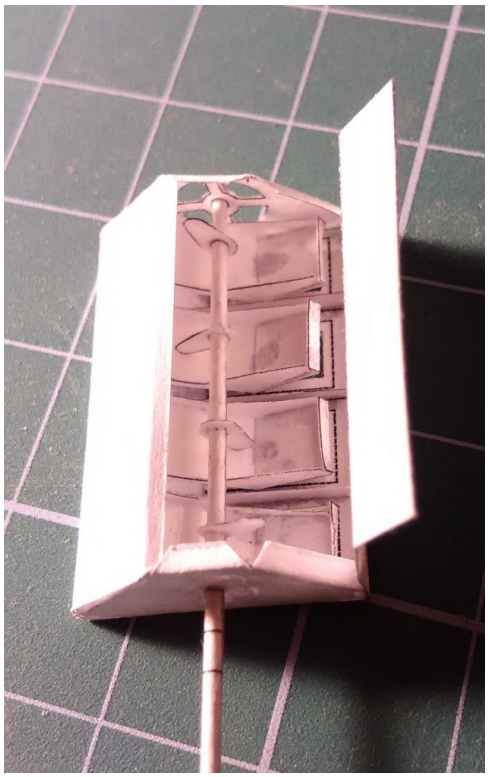

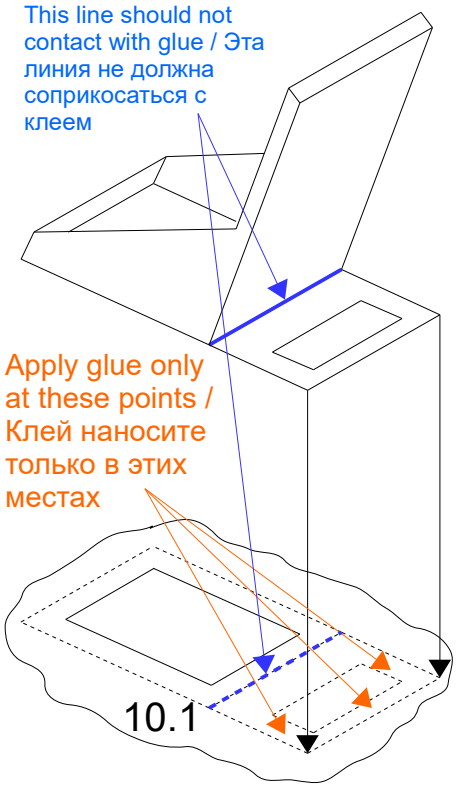
This line should not contact with glue / Эта линия не должна соприкосаться с клеем
Apply glue only at these points / Клей наносите только в этих местах
10.1

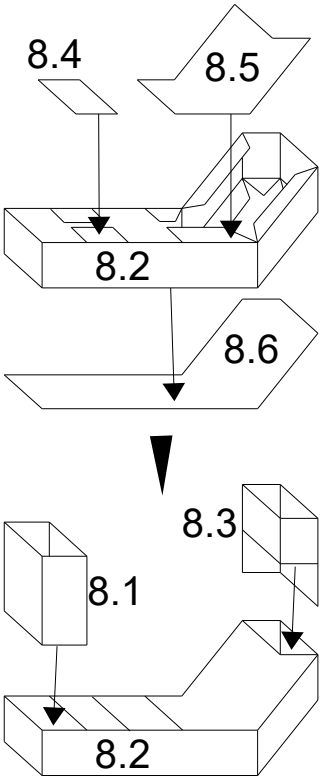
8.4
8.5
8.2
8.6
8.3
8.1
8.2

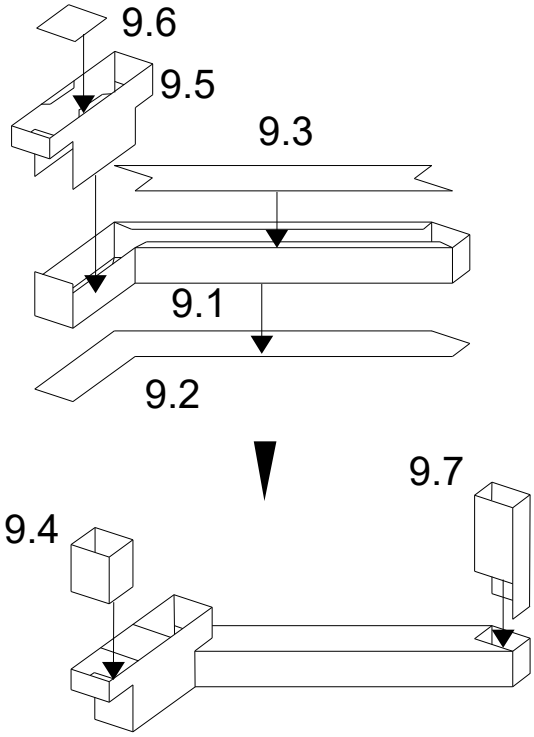
9.6
9.5
9.3
9.1
9.2
9.7
9.4

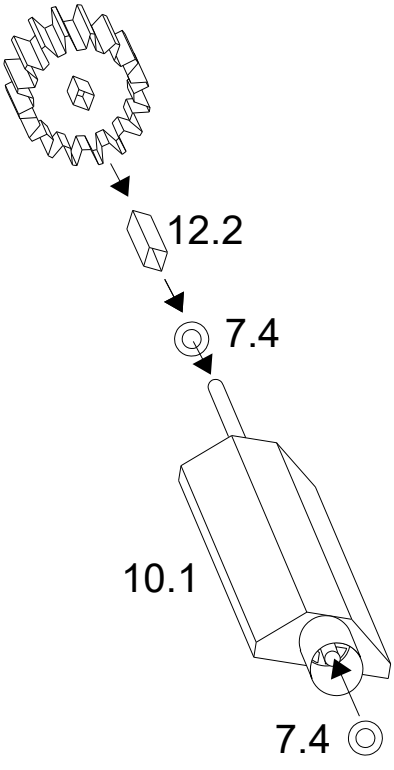
12.2
7.4
10.1
7.4

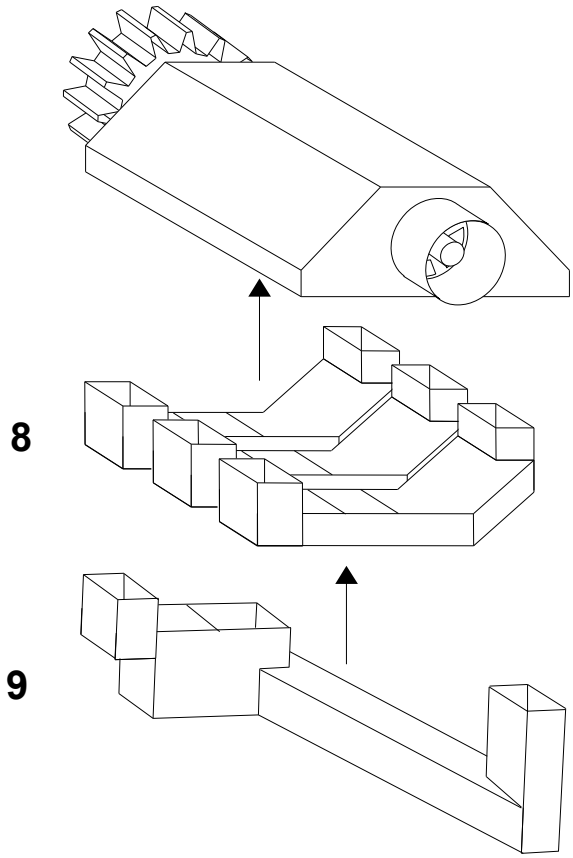
8
9

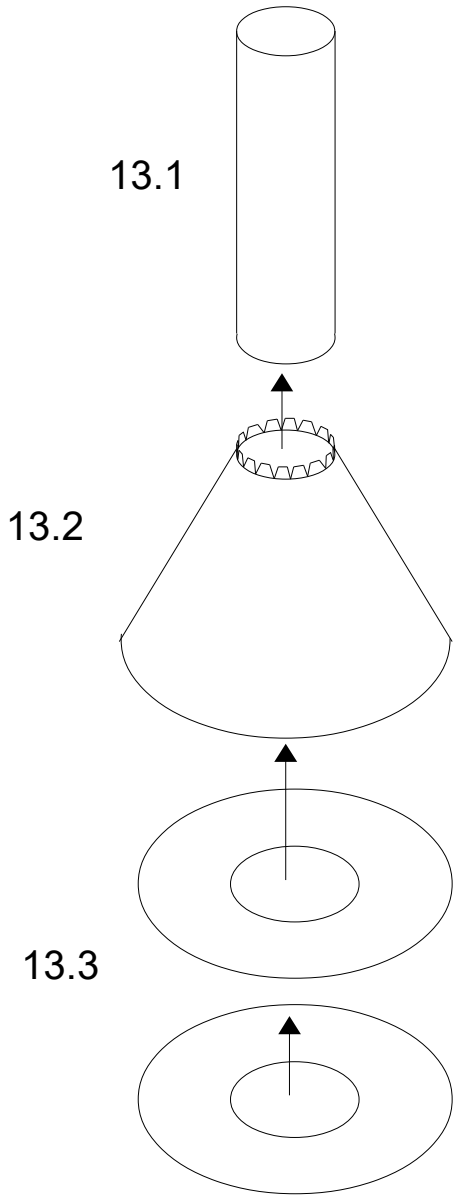
13.1
13.2
13.3